Parcel Number	
1006614	
County	Marion, IN
Township	CENTER
Corporation	
District	
Plat	
Map	82-100-052-000
Alt Parcel	49-10-05-147-010.000-101
Property Class	510
Tax District	101
Neighborhood	146082063-1-460r-063

Property Address

554 N OAKLAND AV
INDIANAPOLIS, IN 46201

Ownership

Name

DERENGOWSKI, SUZANNE

Address

554 N OAKLAND AVE
INDIANAPOLIS, IN 46201--243

Account	2998771		
Book		**Page**	

Legal

PHELAN SUB LANGS E MICH ST ADD L2

Topography	Pub. Utilities	Street or Rd.	Neighborhood
☑ Level	☑ Water	☑ Paved	☐ Improving
☐ High	☑ Sewer	☐ Unpaved	☑ Static
☐ Low	☑ Gas	☐ Proposed	☐ Declining
☐ Rolling	☑ Electricity	☐ Sidewalk	☐ Other
☐ Swampy	☐	☐ Alley	☐ Blighted

Transfer of Ownership **Year** 2026 **Card** 1

Date	Grantor	Valid	Amount	Type
May 06, 2021	Properties & Investments, LLC who i - Apr 30, 2021	Y	200000.00	Sale
May 06, 2021	VANSAF PROPERTY - Jan 01, 1900	Y	0.00	Straight
Aug 31, 2017	Auditor Marion County - Jul 21, 2017	N	6800.00	Sale
Aug 31, 2017	County Marion - Jul 21, 2017	N	6800.00	Sale
Sep 01, 2017	MARION COUNTY - Jan 01, 1900	Y	0.00	Straight
Sep 01, 2017	DFHR LLC - Jan 01, 1900	Y	0.00	Straight
Feb 04, 2015	LIOR, ZIPI INBAL - Jan 01, 1900	Y	0.00	Straight
Sep 14, 2011	SHIMON, ASSAF BEN - Sep 06, 2011	N	62000.00	Sale
Jul 13, 2011	BRUCKER TIMOTHY W - May 25, 2011	N	7000.00	Sale
Sep 14, 2011	DNR LLC - Jan 01, 1900	N	62000.00	Straight
Jul 13, 2011	RBA CAPITAL LLC - Jan 01, 1900	N	7000.00	Straight

VALUATION RECORD

Assessment Year		2026	2025	2024
Reason for Change				
Land	**Homestead-C1**	5,700	5,700	5,700
	Residential-C2	0	0	0
	Non-Residential-C3	0	0	0
	Total Land	5,700	5,700	5,700
Improvements	**Homestead-C1**	211,700	202,600	184,100
	Residential-C2	0	0	0
	Non-Residential-C3	0	0	0
	Total Imp	211,700	202,600	184,100
Total Assessed Value:		217,400	208,300	189,800

Property Sub Class: RES ONE FAMILY PLATTED LOT-510

PRINTED FROM MARION COUNTY, INDIANA

Memorandum

LAND DATA AND COMPUTATIONS

Land Type	Actual Frontage	Effective Frontage	Effective Depth	Factor	Base Rate	Adjusted Rate	Estimated Value	Influence Factor	Land Value
F-9	0	38	130	0.99	160.00	158.00	6000	5-3	5700

Acreage / Sq. Ft.

Total Residential Land Value	5700
Total Non-Residential Land Value	0
Total Acreage 0.11	**Total Land Value** 5700

Land Type

F	Front Lot	81	Legal Ditch
R	Rear Lot	82	Public Road
1	Comm. Ind. Land	83	Utility Trans. Tower
	11 Primary	9	Homesite
	12 Secondary		91 Res. Excess Acres
	13 Undeveloped Usable		92 Ag Excess Acres
	14 Undeveloped Unusable		
2	Classified Land		
3	Undeveloped Land		
4	Tillable Land		
5	Non-tillable Land		
6	Woodland		
7	Other Farmland		
8	Ag Support Land		

Influence Factors

0	Other	5	Misimprovement
1	Topography	6	Restrictions
2	Under Improved	7	Traffic Flow
3	Excess Frontage	8	View
4	Shape or Size	9	Corner Infl.

Occupancy		Story Height	Attic	Bsmt	Crawl
1 ☑ Single Family		1.00	0 ☐ None	0 ☐ None	0 ☐
2 ☐ Duplex			1 ☐ Unfin	1 ☐ 1/4	1 ☐
3 ☐ Triplex		1 ☐ Other	2 ☑ 1/2 Fin	2 ☑ 1/2	2 ☑
4 ☐ 4-6 Family		2 ☐ Bi-level	3 ☐ 3/4 Fin	3 ☐ 3/4	3 ☐
5 ☐ M home		3 ☐ Tri-level	4 ☐ Fin	4 ☐ Full	4 ☐
0 ☐ Row Type					

Construction		Base Area	Floor	Fin.Liv.Area	Value
1 Frame or Alum.	1	1,244	1.00	1,244	149,200
2 Stucco					
3 Tile					
4 Concrete Block					
5 Metal					
6 Concrete					
7 Brick	—	1,232	Attic	616	32800
8 Stone	—	616	Basement		42,200
9 Frame w/Masonry	—	616	Crawl	————	5,600

Roofing	
Asphalt Shingles	☑
Slate or Tile	☐
	☐
Metal	☐

Floors	1	2	
Earth	☐	☐	☐
Slab	☐	☐	☐
Sub & Joists	☑	☐	☐
	☐	☐	☐
Wood	☑	☐	☐
Parquet	☐	☐	☐
Tile	☐	☐	☐
Carpet	☐	☐	☐
Linoleum	☐	☐	☐
Unfinished	☐	☐	☐

Interior Finish	1	2	
Plaster/Dry Wall	☐	☐	☐
Paneling	☐	☐	☐
Fiberboard	☐	☐	☐
	☐	☐	☐
Unfinished	☐	☐	☐

Accommodations	
Total # Rooms	8
Bedrooms	3
Family Room	0
Formal Dining Room	1
Rec Room Type	
Rec Room Area	
Fireplace Stacks	
☐ Metal Fireplace Openings	

Heating / Air Conditioning	
Central Warm Air	☑
Hot Water or Steam	☐
Heat Pump	☐
No Heat Gravity/Wall/Space	☐
Central Air Cond.	☑

Plumbing	#	TF
Full Baths	0	0
Half Baths	1	2
Kitchen Sink	1	1
Water Heater	1	1
Extra fixtures		3
Total		7
No Plumb/Wtr Only	☐	

	Total Base	229,800
	Row-Type Adjustment	1.00
sq.ft.	SUB-TOTAL	229,800
	Full Unfin Interior (-)	
	Half Unfin Interior (-)	
	Extra Living Units (+)	
	Rec. Room (+)	
	Fireplace (+)	
	Loft (+)	
	No Heat (-)	
2476	Air Conditioning (+)	5,700
	No Electricity (-)	
	Plumbing (-/+) TF:7 - 5 = 2	2,800
	Specialty Plumbing (+)	
	Special Features	
	Sub-Total One Unit	238,300
	Sub-Total 1 Unit(s)	238,300
	Garages	
	Integral (-)	
	Attached Garage (+)	
	Attached Carport (+)	
	Basement (-)	
	Exterior Features	14,900
	Sub-Total	253,200
	Grade and Design C	100
	Location Multiplier	1.00
	Replacement Cost	253,200

REMODELING & MODERNIZATION

	Amount	Date
Exterior		
Interior		
Kitchen		
Bath Facilities		
Plumbing System		
Heating System		
Electrical System		
Extensions		

Sketch

Parcel Number	1006614	Residential	Card 1

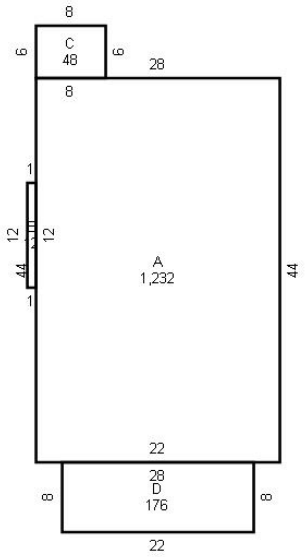

Value Adjustment / Exterior Features

Value Adjustments

Exterior Features
Porch- Open Frm/ equal- 1st fl - 1 - 176sf - 8500
Porch- Enclos Frm/ equal- 1st - 1 - 48sf - 6400

SUMMARY OF IMPROVEMENTS

Use	Ht.	Const Type	Grd	Year Const	Efftv Year	Cnd	Base Rate	Feat	Adj Rate	Size or Area	LCM	No. Un.	Rplc Cost	Dep Obs	REM Val	% Cmp	Nbhd Factor	Trend Fctr	Improvement Value
Dwelling		Frame	C	1920	1999	A				3092	1.00		253200	24	192430	100	1.00	1.10	211700

Card Improvement Total	211700
Total Improvement Value	211700

SKETCH/AREA TABLE ADDENDUM

Parcel Number		
1006614		
Year	2026	Card 1
Property Address		
554 N OAKLAND AV		

SKETCH/AREA TABLE ADDENDUM

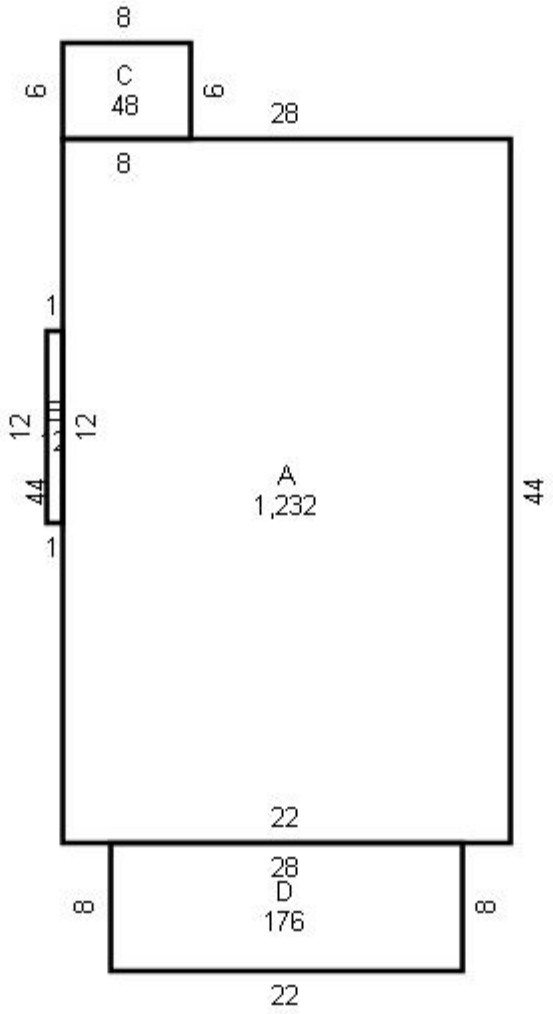

AREA CALCULATIONS SUMMARY

Name	Description	Size (Sqft)
	Total Sqft.	